VITO ECO
Spec sheet

Functionality:

VITO ECO cleans your oil in an easy and hygienic way. It is placed in the hot oil and filters the oil from suspended particles and bitter substances without supervision. After the set time (standard 4,5 min) OEM stops automatically and your oil is ready to be used.



Features:

- For 1-4 deep fryers up to 20l (light to medium sediment)
- Operating temperature up to 200 °C
- Pressure flow filtration
- Automatic filtration - VITO ECO stops after set filtration time
- Automatic safety off - VITO ECO has integrated heat protection
- Up to 4 filtration cycles in a row to filter multiple fryers
- VITO ECO made out of stainless steel (1.4301) and other food safe materials
- Pump-filter unit and drip pan can be cleaned in dishwasher
- Visual signals

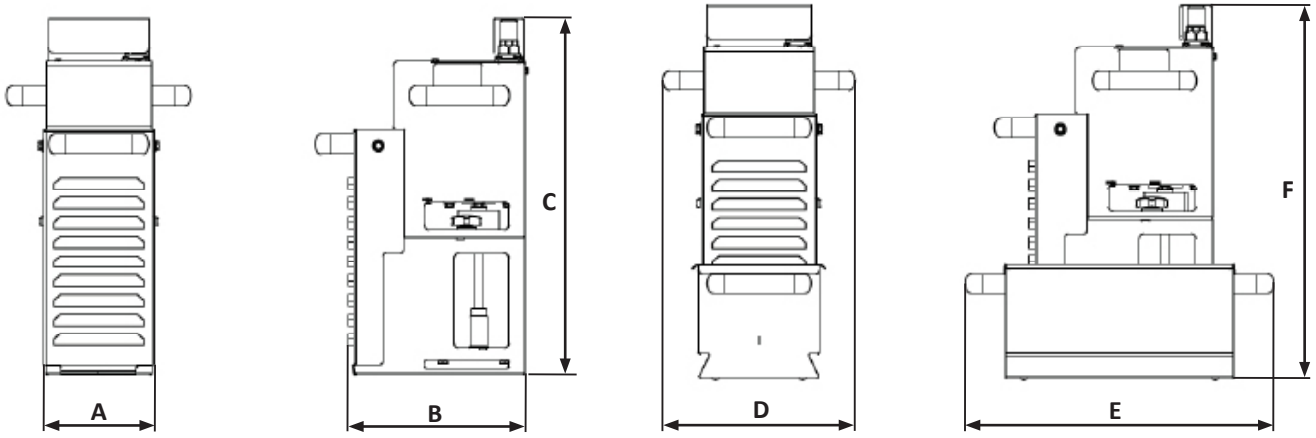

VITO ECO technical Data:

	Width A	Depth B	Height C			Width D	Depth E	Height F
	118 mm	189 mm	368 mm			194 mm	314 mm	395 mm
Filtration power	**Filtration efficiency**	**Particle capacity**	**Work cycle**	**Suction depth**	**Max. power**	**Power connection**	**Fuse inside**	**Protection**
up to 60 l/min	5 µm effective/ 20 µm nominal	1.3 kg* (1,7l)	4,5 min (adjustable)	~ 35cm	300 W	220 - 240 V, single phase	4 AT	Protection Earth (PE)
Total weight	**Weight**	**Temperature**	**Material**					
8.4 kg (with drip pan)	7.3 kg (without drip pan)	max. 200 °C	Stainless steel 1.4301					

*regular bread crumbs

All values are approximate and subject to change due to technical progress.

VITO AG
P: +49 7461 96289-0
info@vito.ag / www.VITO.ag